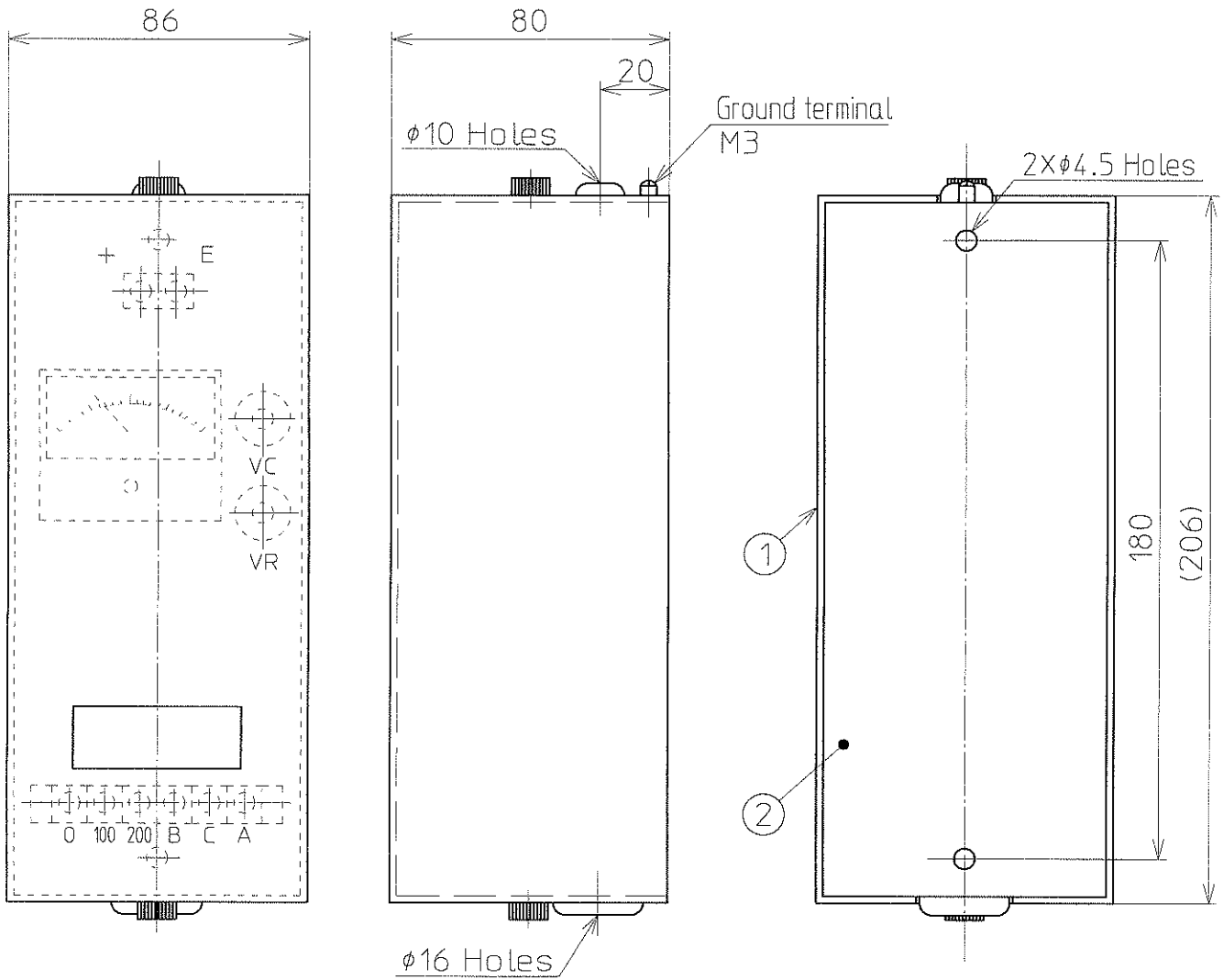

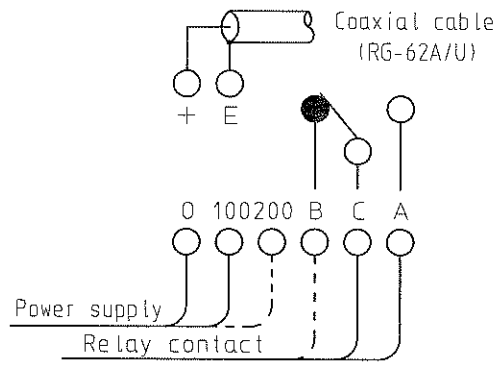

Power supply	100/200V AC ± 10 % 50/60 Hz
Contact rating	250 V 2A AC (Resistive Load) 30 V 2A DC (Resistive Load)

Intrinsically safe construction : i3aG5

Certficate model : C-301

P.No	Name	Qty.	Material
2	housing	1	400 Steel structure
1	Cover	1	Clear acryl

REV	DATE	DESCRIPTION	BY	APP.BY
△				
△				
△				

REVISIONS

DATE	2006-12-14	DR.BY	M. hashimoto
SCALE	N.T.S.	CH.BY	K. Nanga
UNITS	MILLIMETERS	APP.BY	T. Lewahito

NOHKEN

NOHKEN INC.
OSAKA, JAPAN

TITLE OUTLINE DRAWING OF CONVERTER UNIT FOR CAPACITIVE LEVEL SENSOR (RACK TYPE)

MODEL KRE-6200

REFERENCE

DRAWING NO. AS 013285 △0