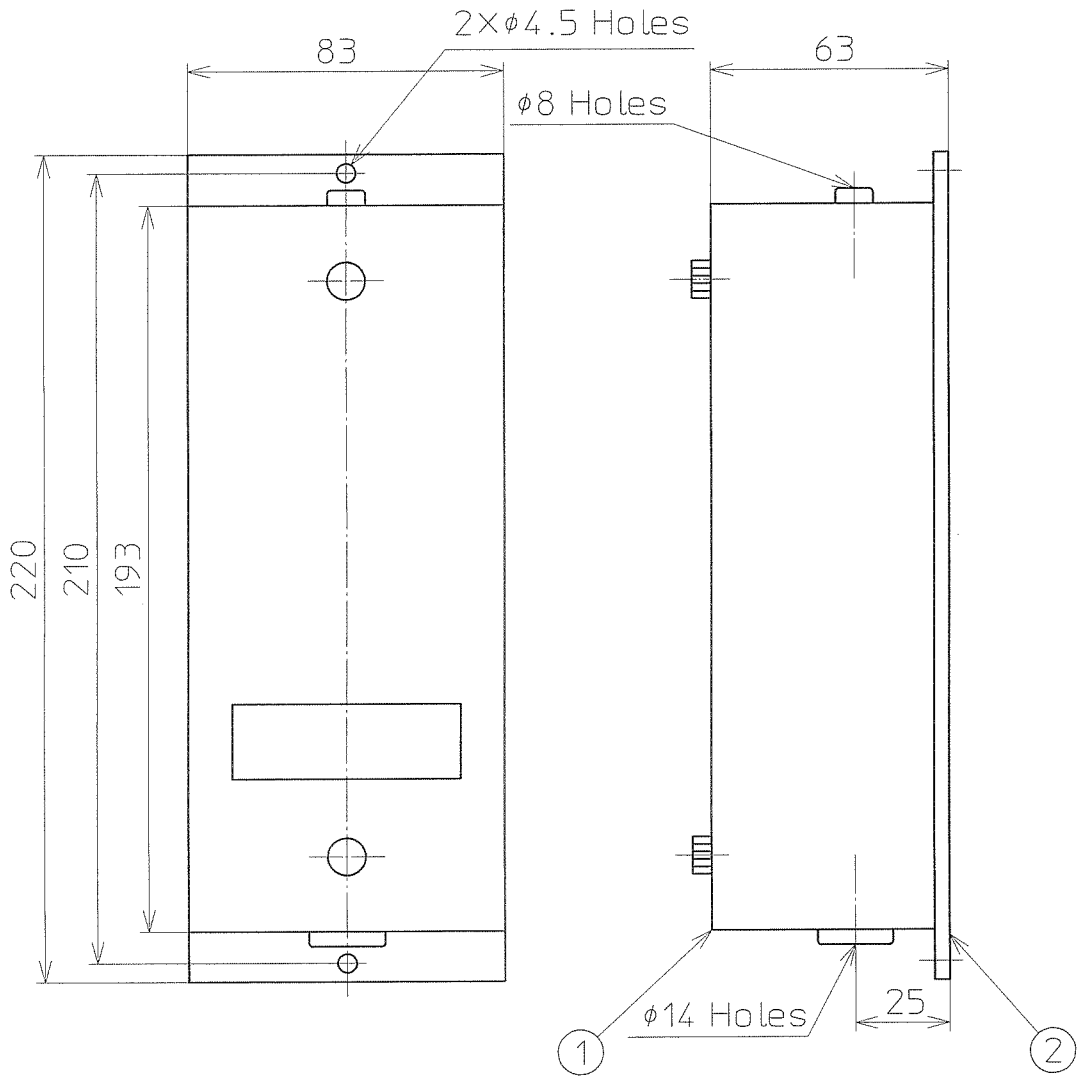

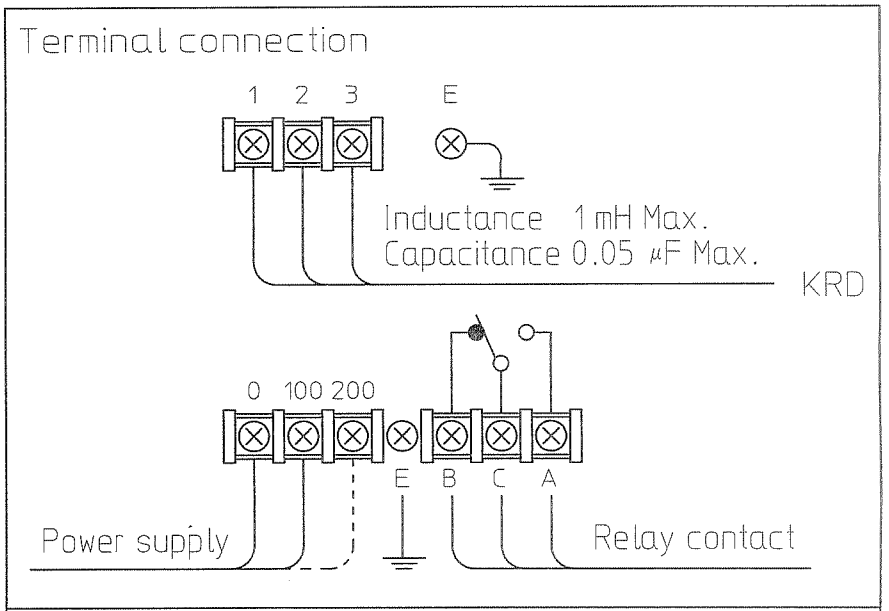

Power supply	100/200 V AC ± 10 % 50/60 Hz
Contact rating	250 V 2 A AC (Resistive load) 30 V 2 A DC (Resistive load)

Intrinsically safe construction : i3nG5
Certficate model : C-350

P.No	Name	Qty.	Material
2	housing	1	400 Steel structure
1	Cover	1	400 Steel structure

REV	DATE	DESCRIPTION	BY	APP.BY
△				
△				
△				

REVISIONS

DATE 2006-12-12
SCALE N.T.S.
UNITS MILLIMETERS
DR.BY M. hashimoto
CH.BY K. Tango
APP.BY T. Iwauchita

NOHKEN
NOHKEN INC.
OSAKA , JAPAN

TITLE OUTLINE DRAWING OF CONVERTER UNIT FOR CAPACITIVE LEVEL SENSOR

MODEL KRI

DRAWING NO. AS 013300 △0