DRAWING NO. SA 18003

Socket (Note.1)

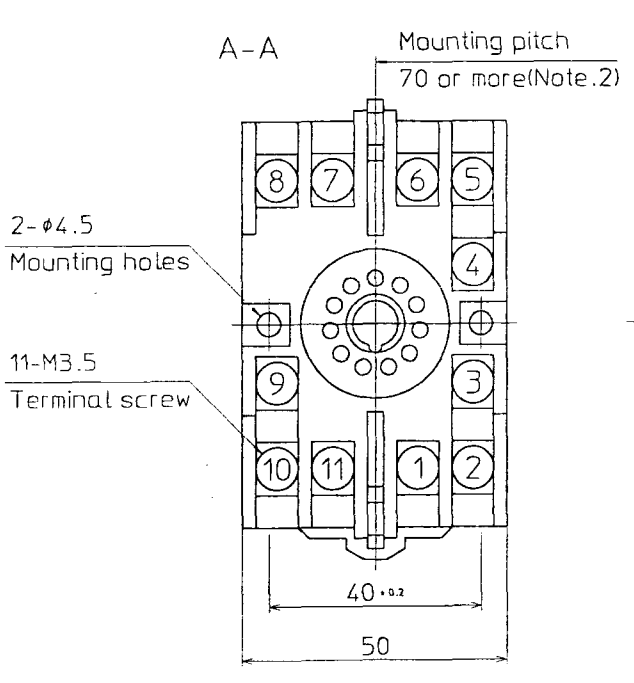

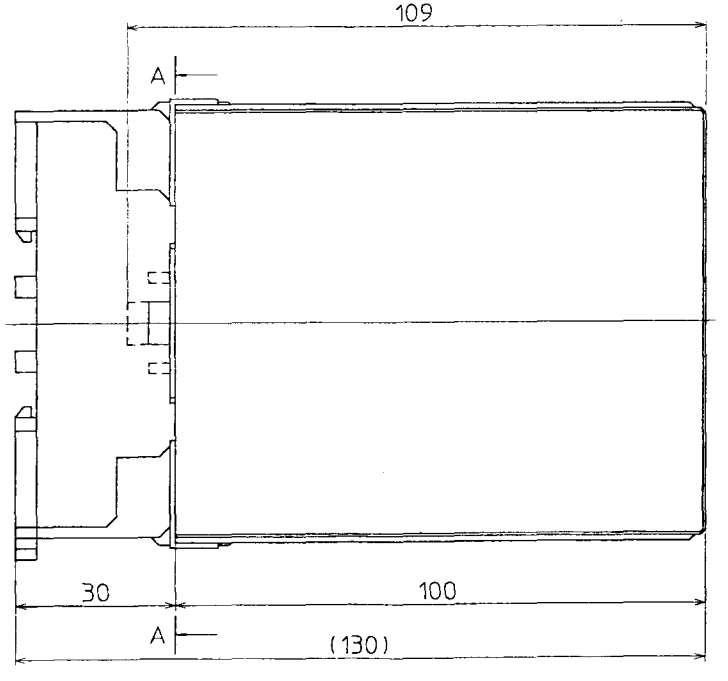

Housing

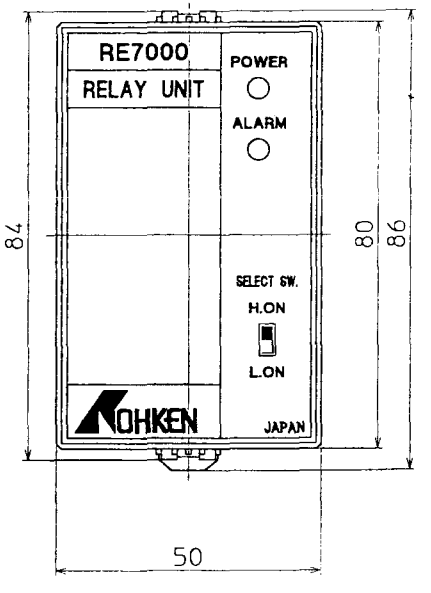

Note
1. Socket is option part.(Equal to OMRON Corp. 11PFA)
2. In case of mount or more 2 sockets.

REV	DATE	DESCRIPTION	BY	APP.BY
△				
△				
△				

REVISIONS

DATE	10-17-'91	DR.BY	
SCALE	N.T.S.	CH.BY	
UNITS	MILLIMETERS	APP.BY	

NOHKEN INC.
OSAKA, JAPAN

TITLE: OUTLINE DRAWING OF MODEL RE RELAY UNIT

MODEL: RE7000 | SHEET NO.

DRAWING NO. SA 18003